Nova
Нова

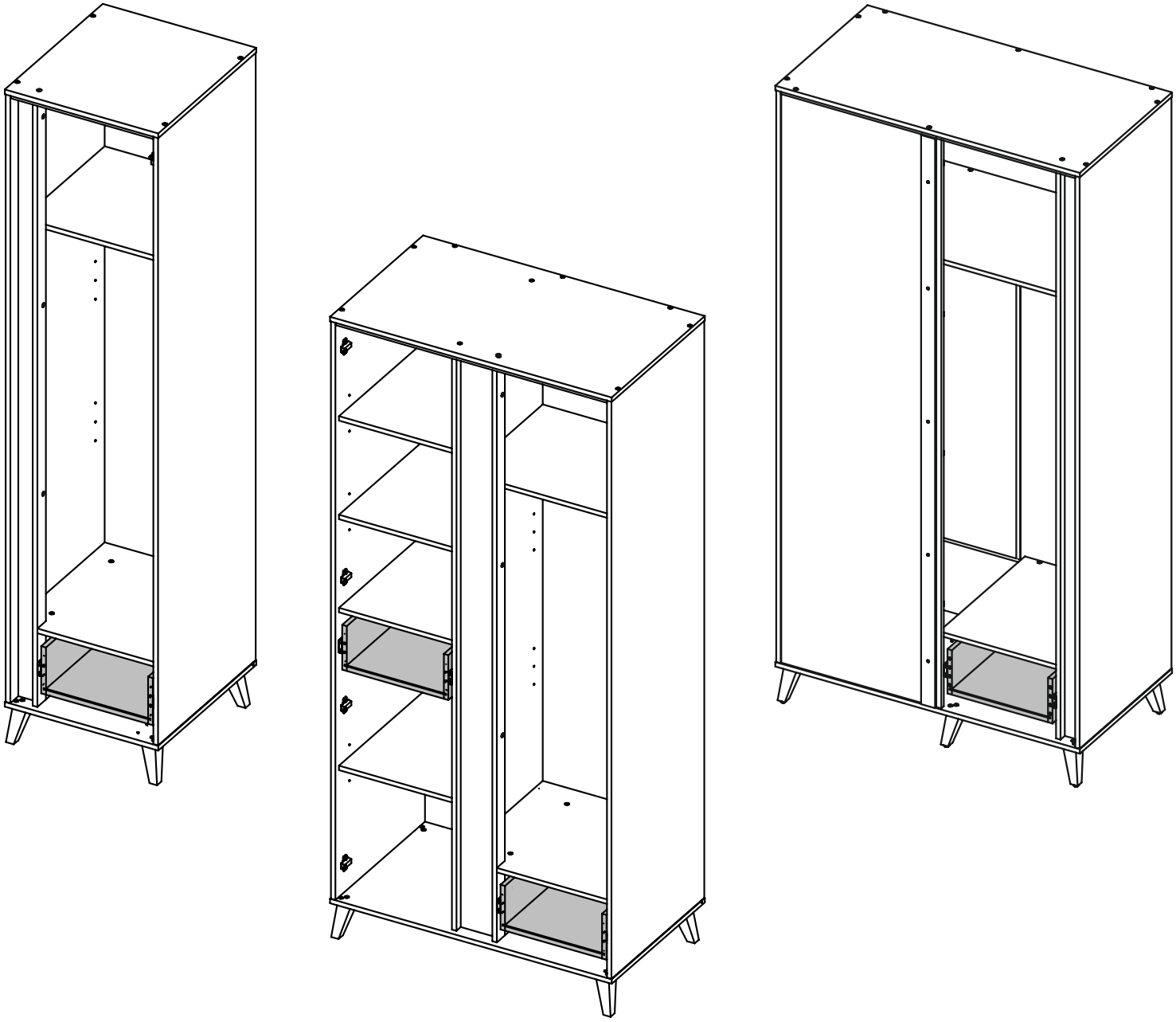

Корпус ящика 2 (19К912)

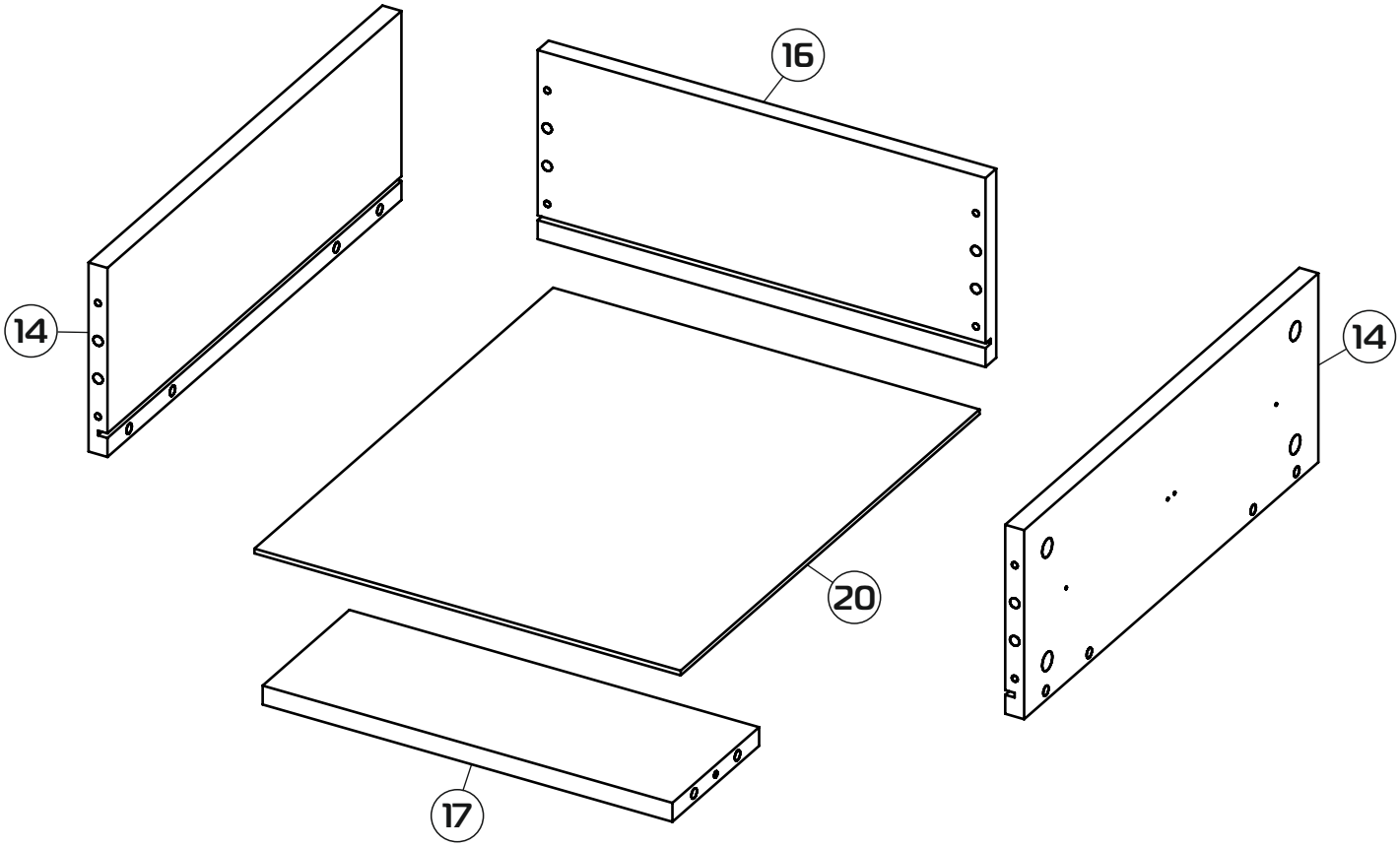

14 434x160x16 (x2)

16 378x160x16

17 346x128x16

20 441x360x4

1 : 1

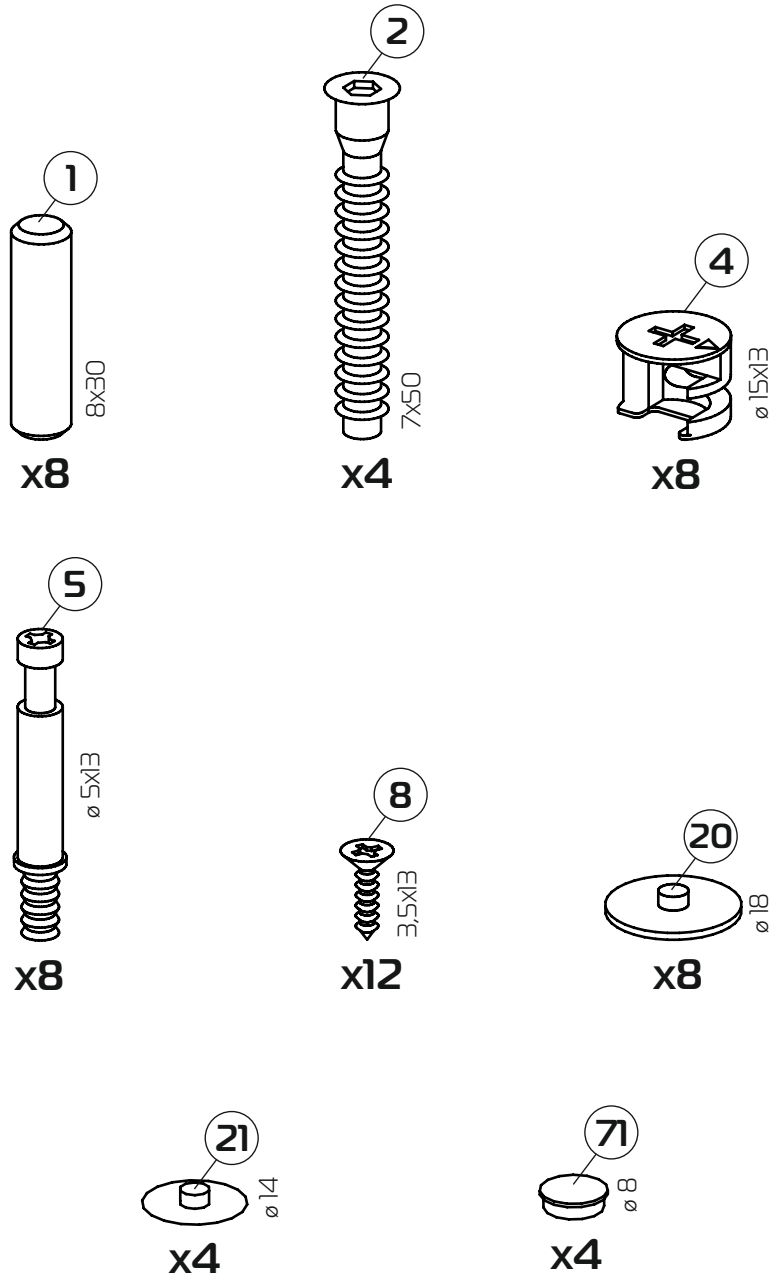
1
8x30
x8
2
7x50
x4
4
ø 15x13
x8
5
ø 5x13
x8
8
3,5x13
x12
20
ø 18
x8
21
ø 14
x4
71
ø 8
x4

1 : 2

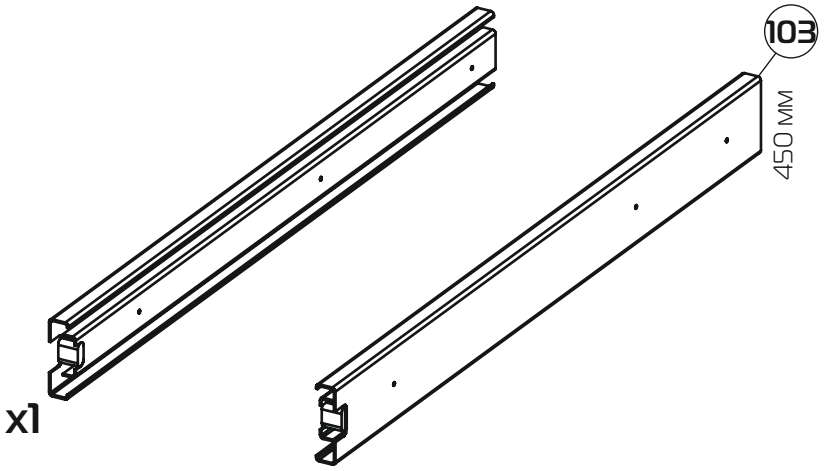
x1
103
450 MM

1

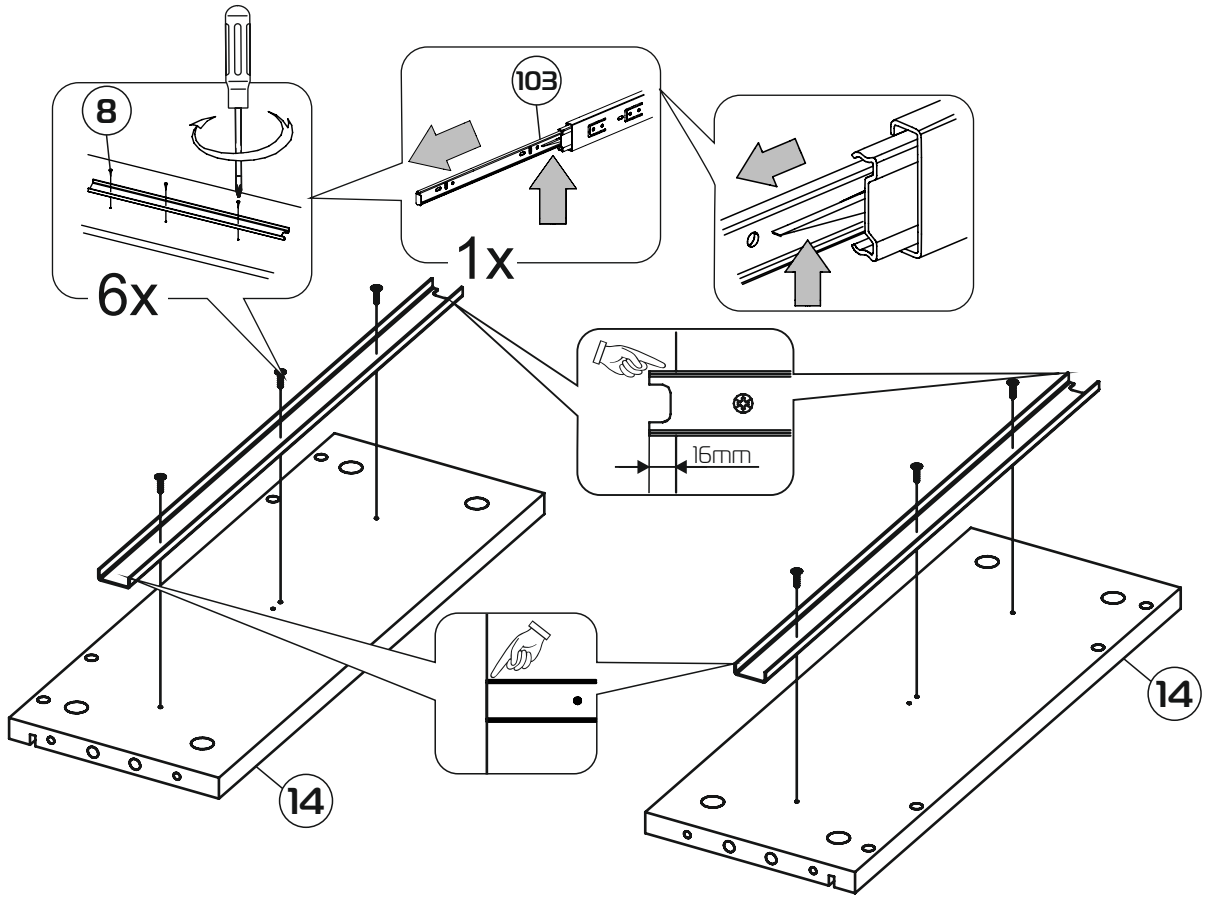

2

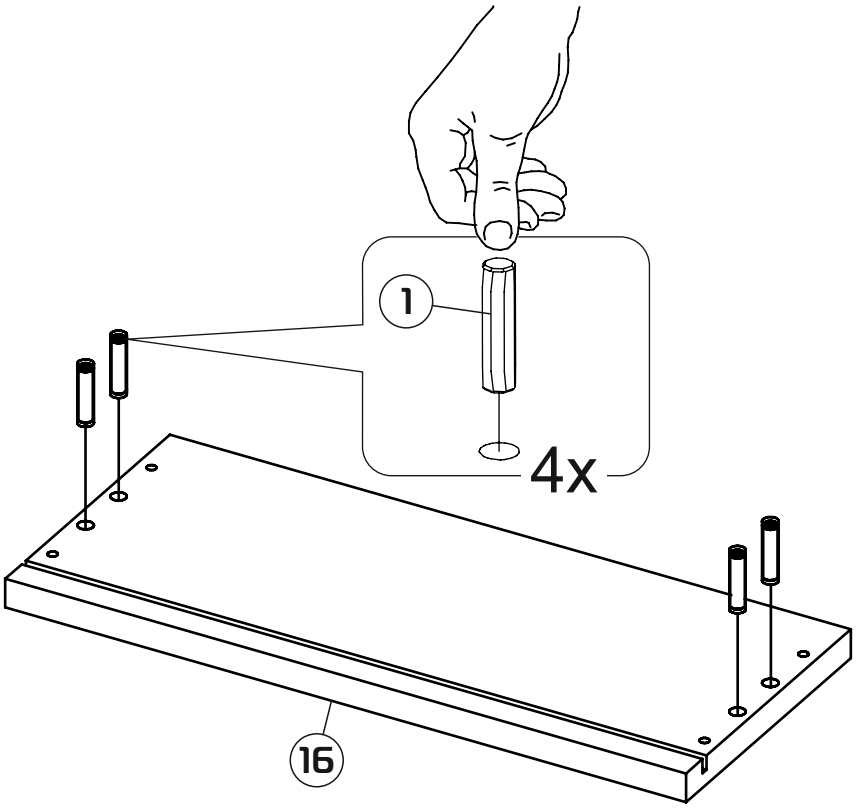

3

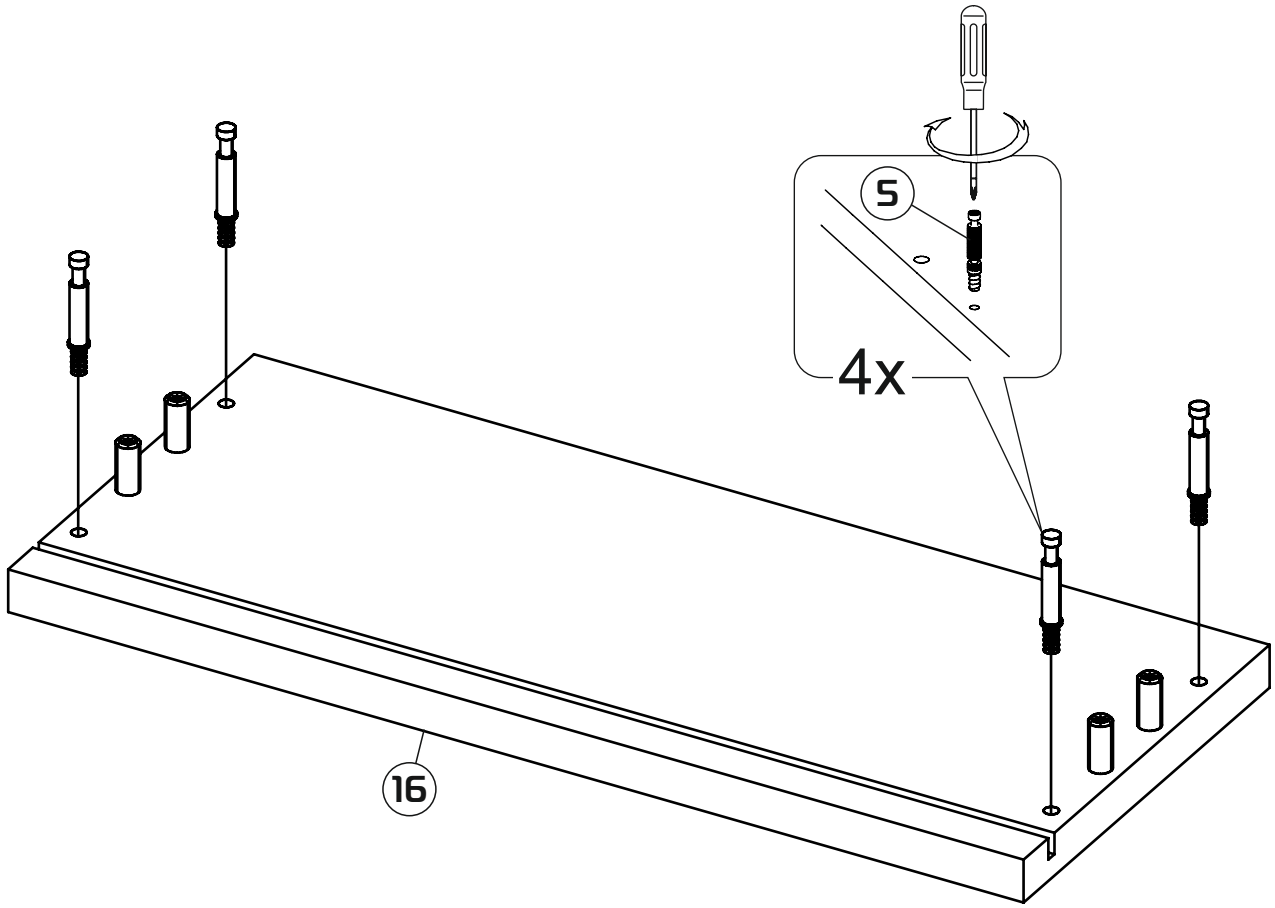

4

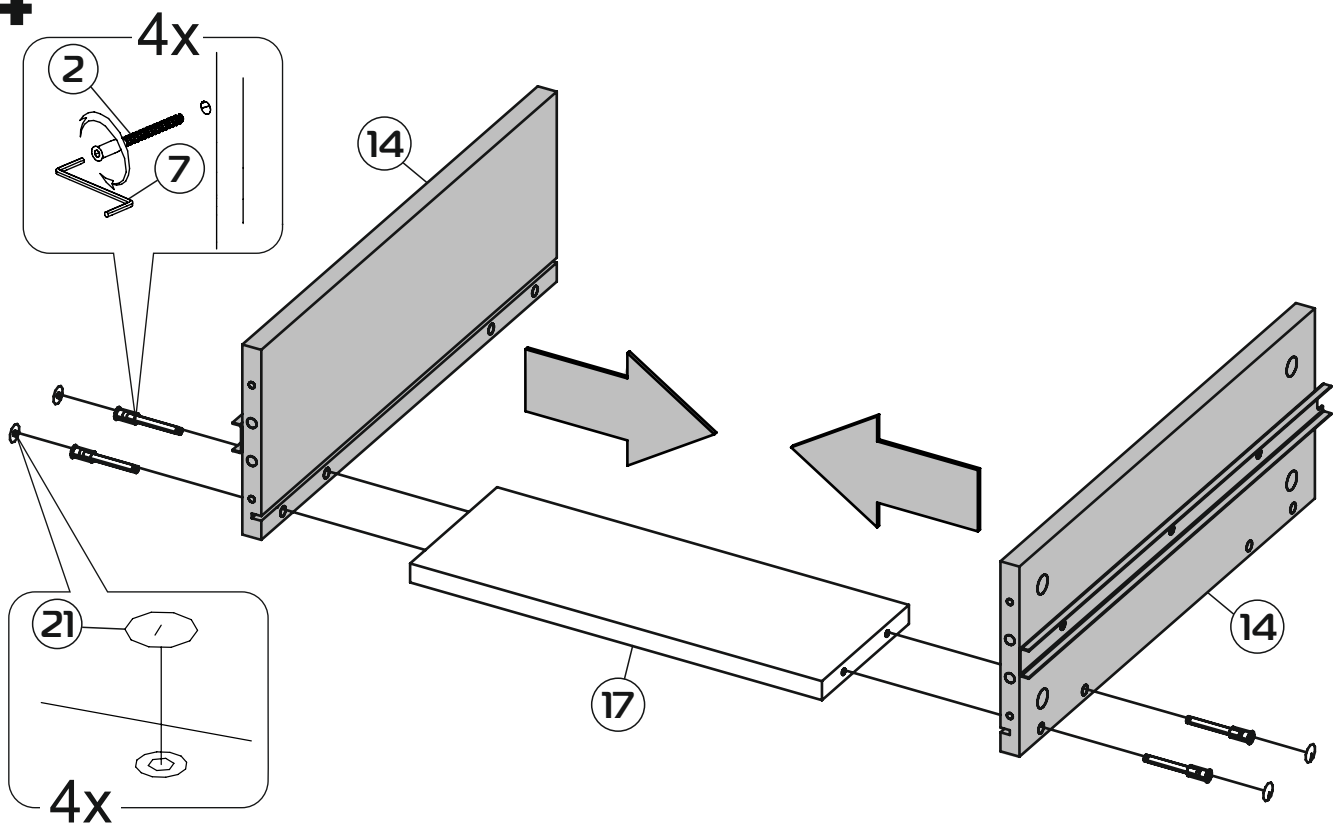

5

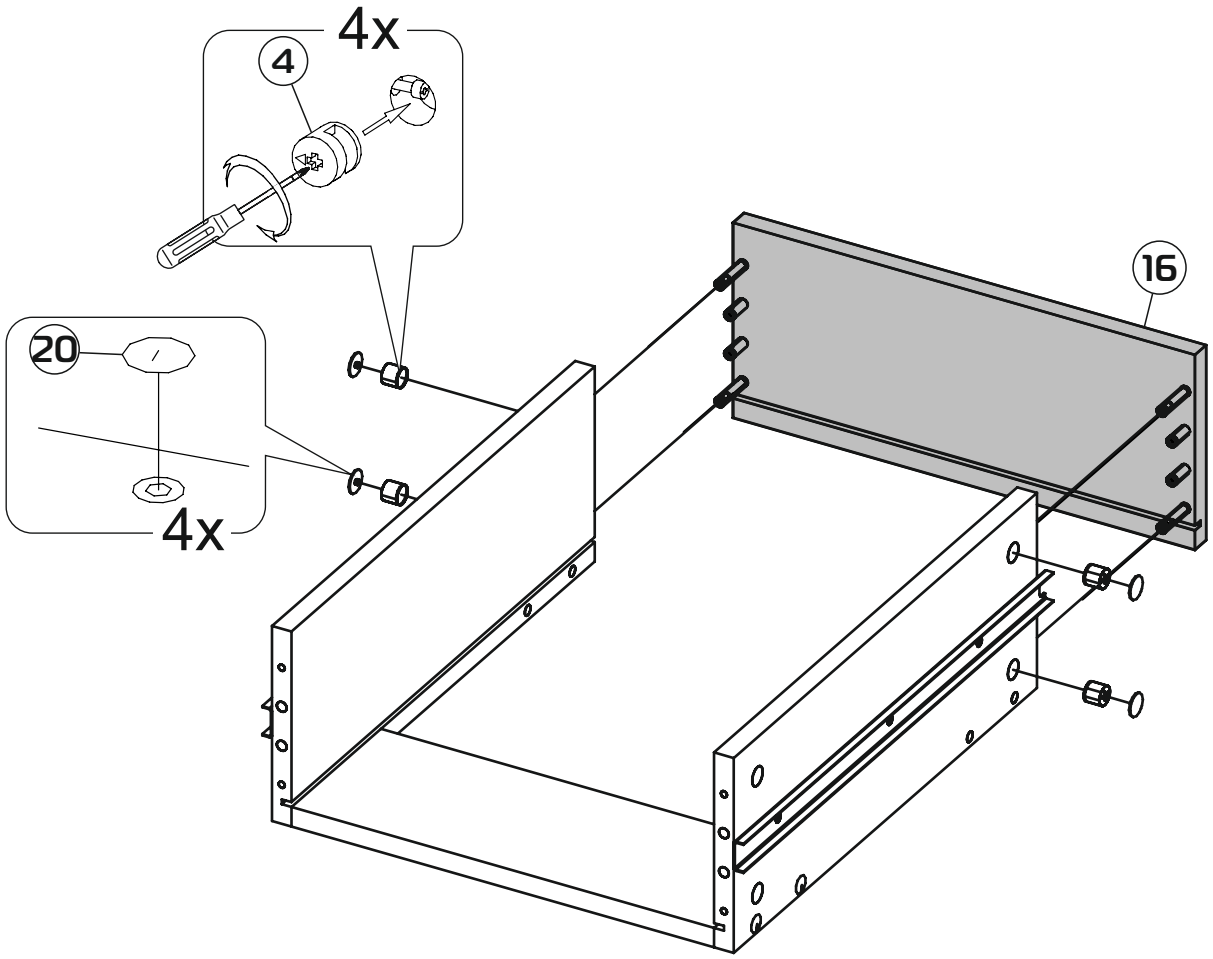

6

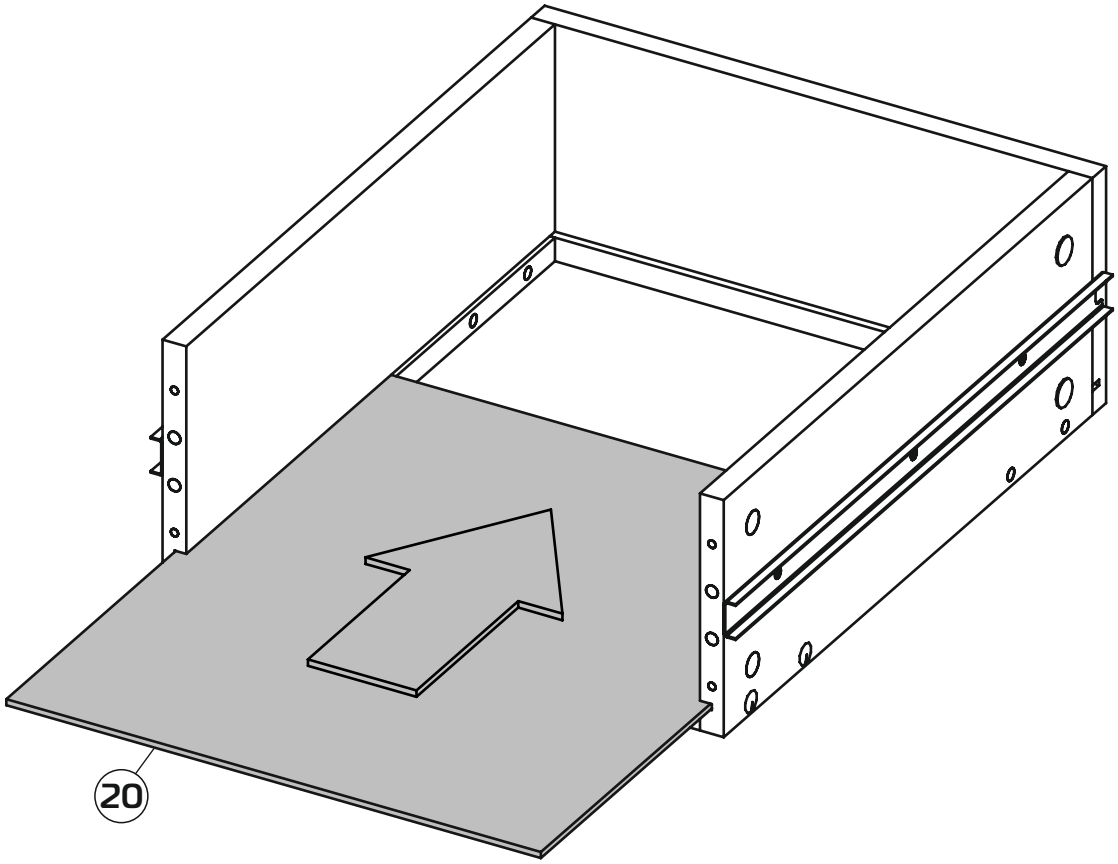

7

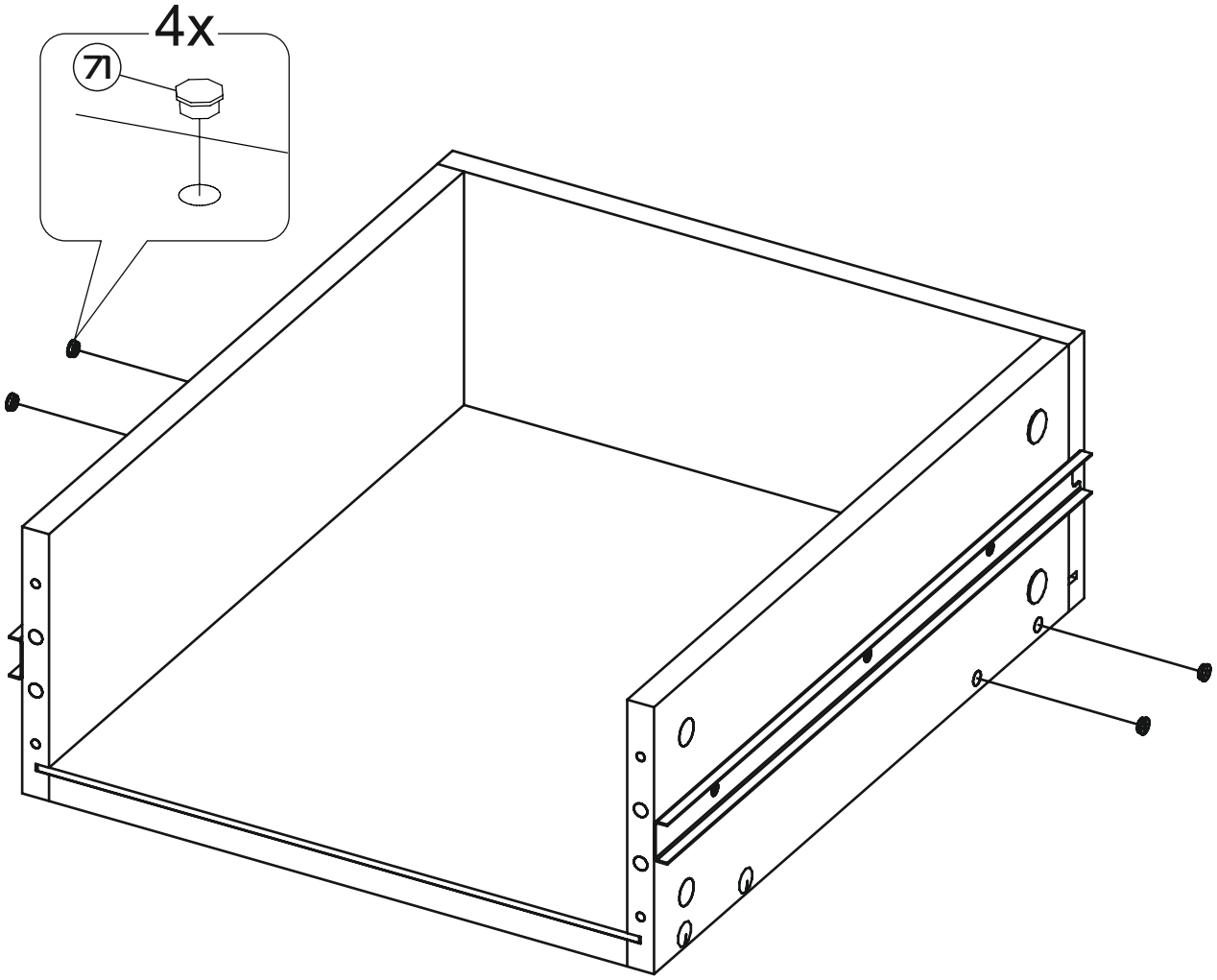

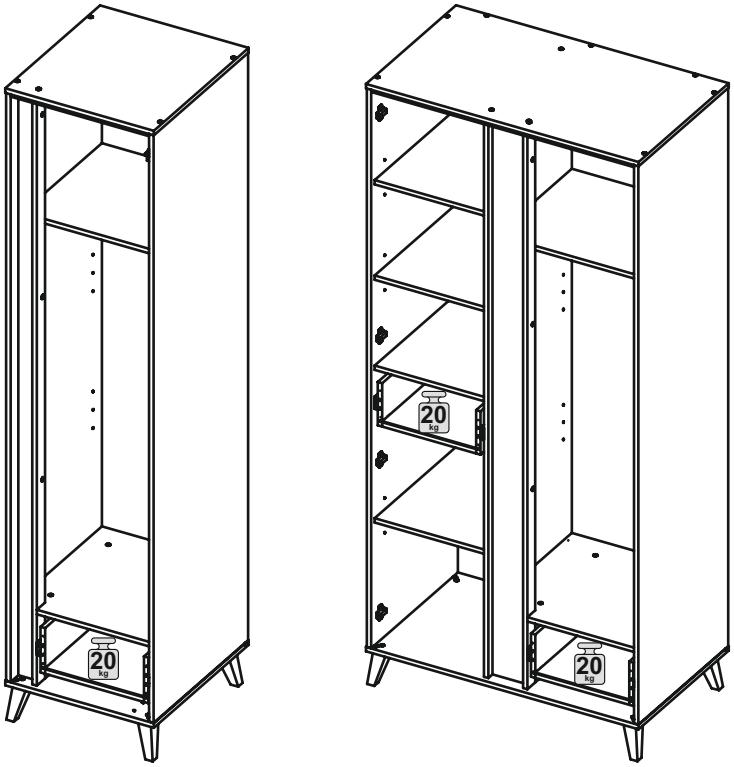
20
kg
20
kg
20
kg

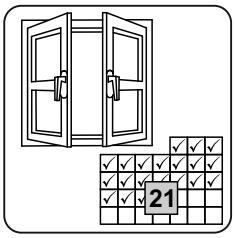
21

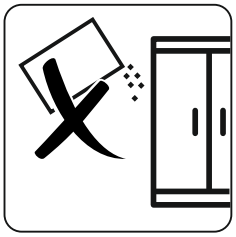

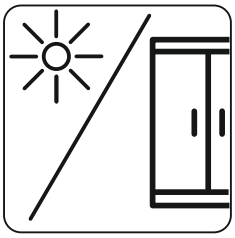

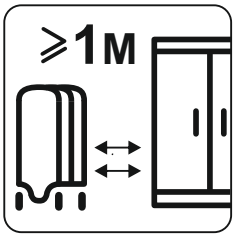
≥1м

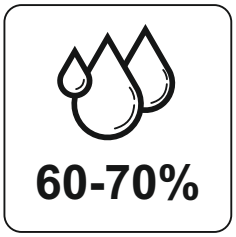
60-70%

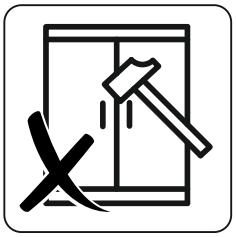

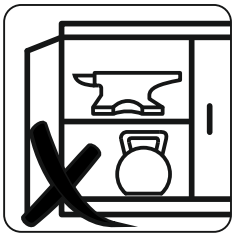

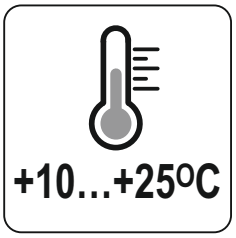
+10...+25ºC